BOA-M1 Bore Welding System

(ultra compact and affordable bore welding system)

Manual version shown—Also available is the full automatic version with handheld remote control

The BOA-M1 basic bore welding system is Bore Repair Systems' most compact and affordable bore welder. The welder drive and spindle assembly will fit nearly anywhere at just under 280mm (11.0") long.

The BOA-M1 basic package is extremely versatile. With standard components, it can reach bores nearly 610mm (24") away from its' mount location, or bores over 1.2m (48") apart from one another when mounted between bores.

The BOA-M1 design is elegantly simple and extremely durable, very easy to set up and operate. It utilizes the same gun and conduit system as the BOA-408i so parts are interchangeable.

While the BOA-M1 bore welding system is a popular choice with our existing BOA-408i and BOA-550HD customers who are interested in a second bore welder that can fit in tight, restricted access bore repair jobs, it is also very popular with our new customers who are just starting out who need a bore welder that will give top quality professional results at the lowest possible entry price.

The BOA-M1 comes complete with a hand feed wheel and rotation speed timer with chart. This ensures smooth, even weld bead application every time. The BOA-M1 can also be easily driven automatically with a basic hand drill or for maximum versatility you can add our automatic stepper drive kit.

Please call us today at 603-835-2409 or visit our website at www.borerepair.com Several purchase and leasing options are available.

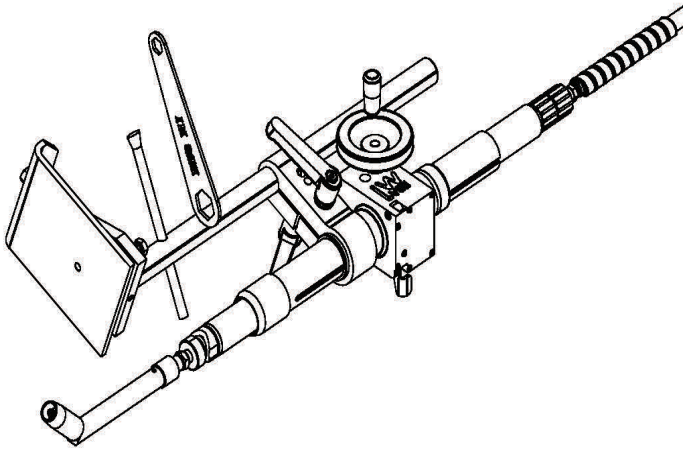

BORE REPAIR Systems, Inc.

CE approved √

Www.BoreRepair.com

Pat. 6,137,076 Pat. 6,448,531 Pat. 6,737,608
Pat. 6,284,995 Pat. 6,486,438

2017

PO Box 59
Alstead, NH 03602 USA

Tel: (603) 835-2409
Fax: (603) 835-2609